This document is our property and shall not without our permission be altered, copied, used for manufacturing or communicated to any other person or company.

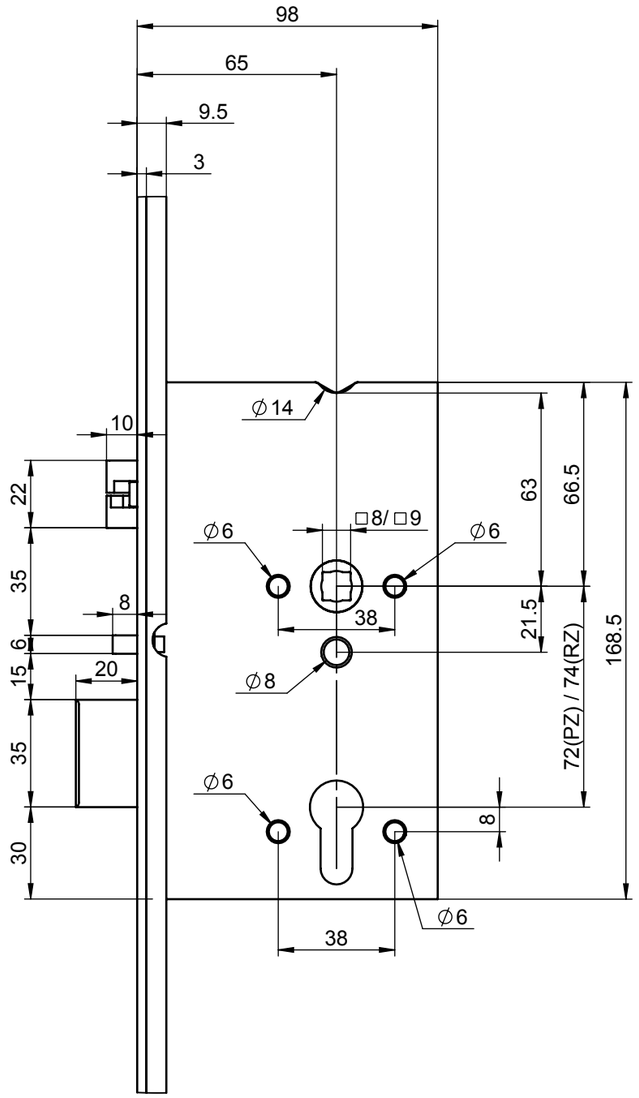


DETAIL A
SCALE 1 : 2

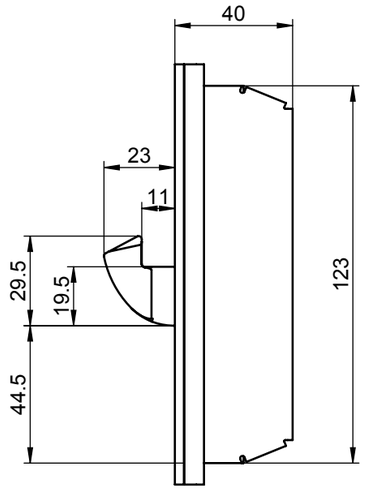


DETAIL B
SCALE 1 : 2

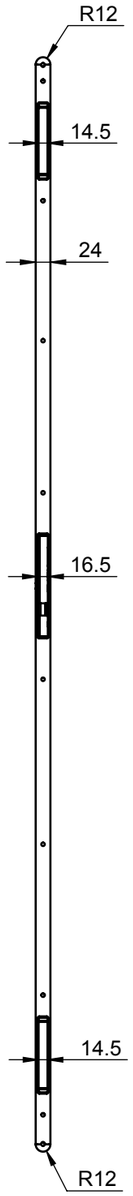


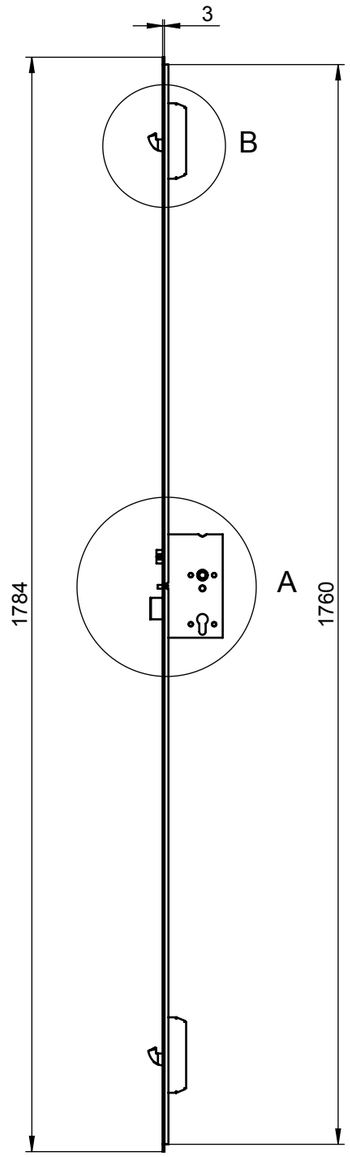


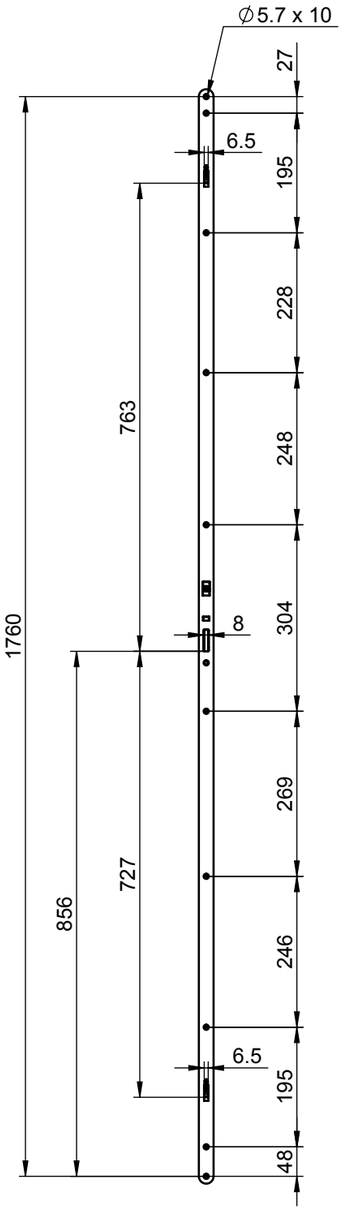


| | | | | | | | |
|---|---|---|---|---|---|---|---|
| Surface: 456466 | | | Material: | | | General tolerance: ISO 2768-mH | |
| Volume: | Weight: | Surface area: | created: 18.04.2016 JK | designed by: | changed by: | Scale: 1:10 (A3) | Projection: |
| ABLOY® Abloy Oy An ASSA ABLOY Group brand | | | ABLOY MP518 / 65 / 1760 / FLAT | | | Alternate ID | |
| | | | | | | Document ID | Rev.: 1 |

Part/assy: Configuration:Default SHEET 1 OF 1