This document is our property and shall not without our permission be altered, copied, used for manufacturing or communicated to any other person or company.

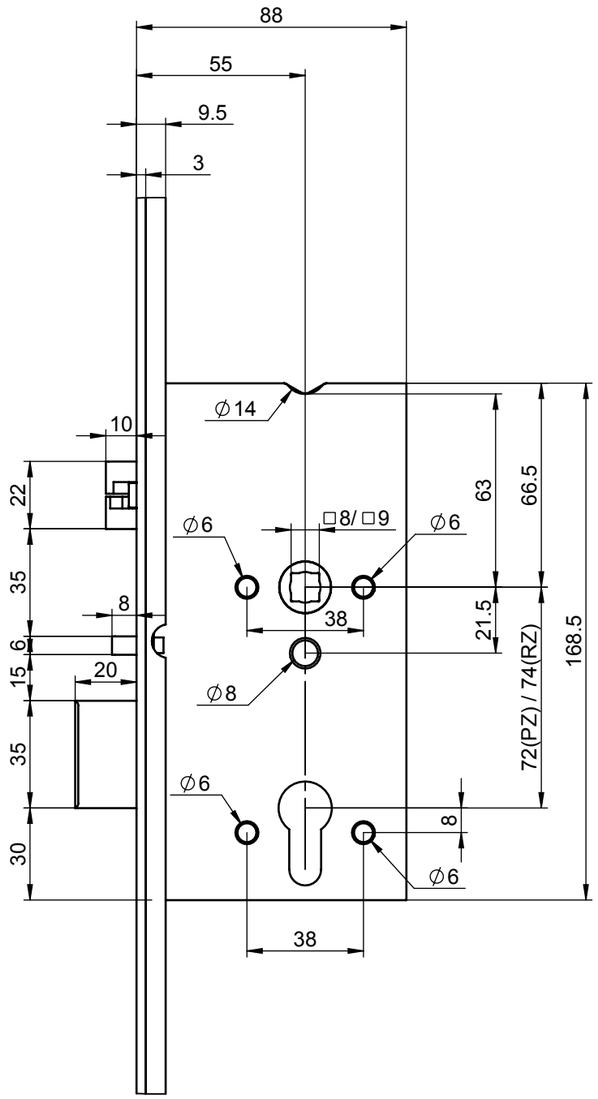

DETAIL A
SCALE 1 : 2

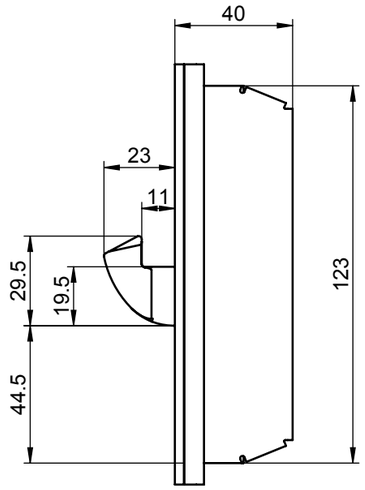

DETAIL B
SCALE 1 : 2

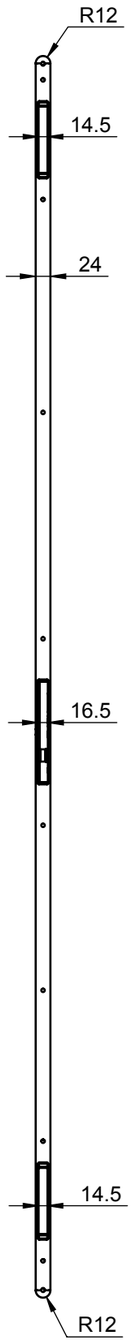

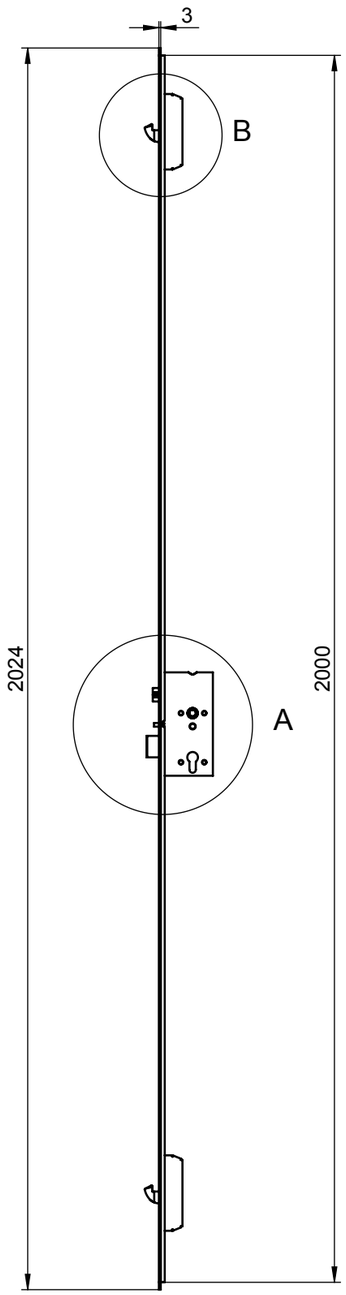

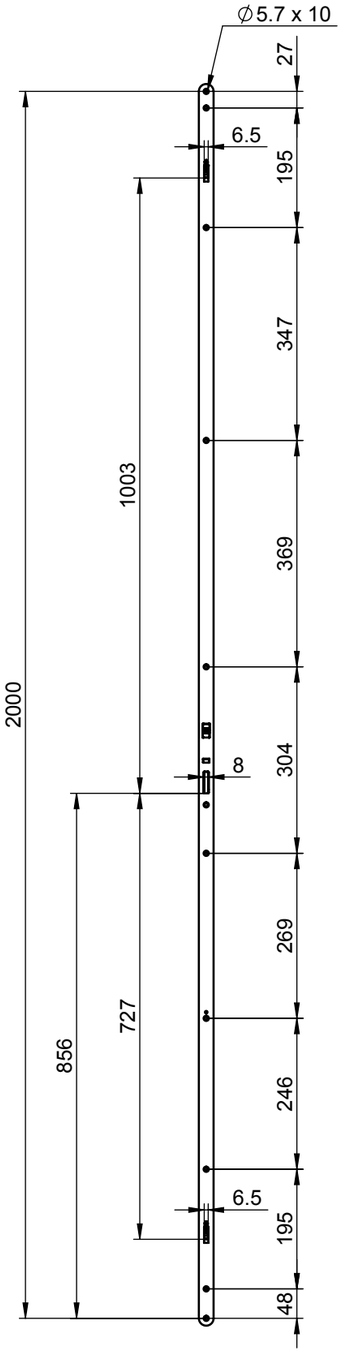

Surface: 456466			Material:			General tolerance: ISO 2768-mH	
Volume:	Weight:	Surface area:	created: 19.04.2016 JK	designed by:	changed by:	Scale: 1:10 (A3)	Projection:
ABLOY® Abloy Oy An ASSA ABLOY Group brand			ABLOY MP532 / 55 / 2000 / FLAT			Alternate ID	
						Document ID	Rev.: 1

Part/assy: Configuration:Default SHEET 1 OF 1