Abloy Oy Wahlforssinkatu 20 P.O. Box 108 FI-80101 Joensuu, Finland | Tel. +358 20 599 2501 | abloy.com

ABLOY® EL460L

High security DIN Low Energy handle controlled lock for narrow profile doors

Product description
EL460L is used especially in situations where the advantages of handle-controlled unlocking have to be combined with the mechanical security requirements. The integrated monitoring contacts from the lock can be connected even to battery operated systems, because of extremely low power consumption.
EL460L consumes energy virtually only, when lock status is changed.
Smart built-in adaptive electric component enables open interface with even stand-alone battery operated systems without complicated integration.
When door closes, dead bolt is thrown out automatically, double action latch is blocked and the lock case is secured in two points.
The egress side settings can be performed on the lock as required.
EL460L with split spindle function
Outside handle is engaged electrically, e.g. by electric access control. By pressing engaged handle, dead bolt is retracted and double action latch released.
Inside handle opens lock mechanically (egress function), no need for electric control.

Overview of Advantages
- Mechanical automatic locking system
- Non handed, left / right
- Side of mechanical egress can be changed over
- Burglary-resistant due to dead bolt with 20 mm throw
- Suitable for fire-rated doors
- Controllable outside handle
- Mechanical override with cylinder
- Monitoring functions
    - Door status
    - Handle down
    - Bolt deadlocked
    - Lock open
    - Key cylinder used
    - Sabotage loop

Scope of delivery
- 1 pcs lock case
- Operating manual

Ordered separately
- Strike plate (e.g. EA330)
- Cable EA218 (6m) / EA219 (10m)
- Lead cover EA280/281
- Handle set (e.g. EH006/0750) and spindle
    - Split spindle EA288/289 with EL460L
- Cylinder(s) (e.g. CY321T)

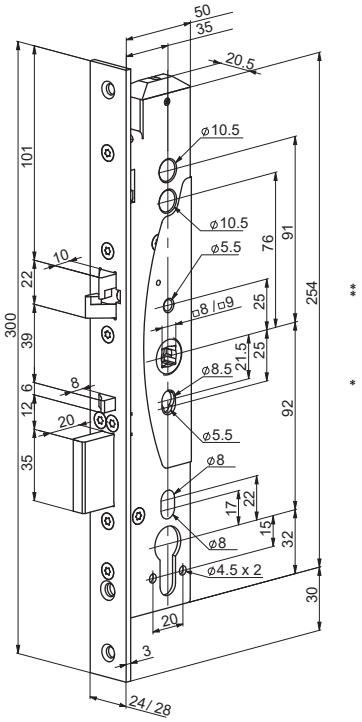

Technical data

Handing	Non-handed, left/right
Settable egress side	Yes
Mechanical cylinder override	Yes
Latch	Double action latch
Dead bolt	Yes, 20mm
Input operating voltage	3.6V (0%) -24 (+15%) VDC
Rated current consumption	3.6 VDC idle 12uA, max 434mA, 80ms motor driving time 24 VDC, idle 22uA, max 920mA, 80ms motor driving time
Microswitch capacity (monitoring contacts)	Max. 0.5 A 30 V AC/DC resist.10 W
EN 1634-1	not approved
EN 14846:2008	not approved
EN 61000-6-1:2007	EMC
EN 61000-6-3:2007	EMC

This content is protected by Intellectual Property Rights Laws. The title to the content shall not pass to you, and instead shall remain with Abloy Oy or a third party holding the title. Abloy develops continuously the products and solutions offered. Therefore, the information contained in the document is subject to change without notice. ABLOY PROVIDES THIS CONTENT ON AN "AS IS" BASIS WITHOUT ANY WARRANTIES OF ANY KIND, EXPRESS, IMPLIED, OR STATUTORY."